Google Cloud

PRESENTS

# Agentic AI Day

Build the next generation of intelligent agents

Powered by H2S

## TEAM DETAILS

Team Name - **Majdoor AI**

Team Leader Name - **Kushal Shah**

Problem Statement - **Receipt Management for Google Wallet**

# IDEA BRIEF

# INFOGRAPHICS

**72%** of consumers admit they often lose or discard physical receipts before reviewing them.

**- Adobe Study**

**91%** of global consumers use digital payment methods (e.g., cards, wallets, UPI), but only **32%** track their spending regularly.

**- Deloitte Global Payments Report**

Lack of real-time insights leads to reactive spending habits, with **60%** of people realizing they overspent only after month-end.

**- Mint**

Imagine walking out of a store with a handful of purchases and no clue **where the receipt went, how much you've spent this month, or whether that detergent you just bought was already stocked at home**?
In a world where digital payments have become seamless, personal financial awareness remains fragmented and reactive.

That's the problem we're solving!

# IDEA BRIEF

Project Raseed is an agentic AI powered financial assistant that **transforms Google Wallet into a smart hub** for everyday money management.

By integrating directly with Google Wallet, Raseed delivers live, updatable passes and smart alerts, **empowering users to make timely, informed financial decisions with zero friction**.

It uses Gemini's multimodal AI and Google APIs to **digitize receipts, analyze spending, track inventory, and surface personalized insights**.

At its core it's **a conversational agent**, trained on **real-time Wallet data**, that **understands natural language queries and responds with context-aware suggestions** like shopping lists, recipe ideas, and payment recommendations.

# OPPORTUNITIES

# HOW DIFFERENT IS IT FROM OTHER EXISTING IDEAS?

Uses **multimodal AI (Gemini) to process receipts via image**, video, or live feed whereas apps like Expensify or Smart Receipts rely solely on **static image OCR** with limited item-level parsing.

Offers a **conversational AI assistant that understands local language** queries, unlike tools like Walnut or Money Manager, which focus only on transaction tagging without intelligent dialogue or multilingual support.

**Directly integrates with Google Wallet** to create live, dynamic passes, whereas **most apps stop at expense categorization** and don't interact with digital wallets (e.g., CRED, YNAB, or Splitwise do not generate wallet-storable cards).

**Combines multiple financial workflows** like **receipt digitization, spending analysis, refill alerts, expiry tracking, and best payment recommendations** whereas existing solutions like Mint or Truebill (now Rocket Money) are single-purpose and don't offer unified, automated assistant experiences.

# HOW WILL IT BE ABLE TO SOLVE THE PROBLEM?

**Automates** the entire process from **receipt capture to insight generation** hence reducing **manual effort to zero**.

Provides **real-time financial insights and reminders**, enabling users to **act before issues arise** (e.g., refill alerts, food expiry).

Embeds **all key information into Google Wallet passes**, ensuring users can access insights **directly from their existing wallet**.

Uses LLMs to **contextualize purchases and deliver tailored suggestions** like recipes, **best card to use, or nearby store offers.**

# USP OF THE PROPOSED SOLUTION

**Multimodal + multilingual intelligence**, combining Vertex AI with local-language understanding for inclusive smart finance.

Proactive insight delivery via Wallet passes, not just reactive tracking but **blending automation with behavior-based nudges**.

**Bridges online and offline worlds**, from **Gmail/SMS detection to QR-based shopping passes** for in-store use.

First-of-its-kind **AI agent integrated with Google Wallet**, turning it into a **live personal finance dashboard**.

# FEATURES

Google Cloud

# Agentic AI Day

Powered by H2S

- AI Chat Assistant (Voice + Text Queries)
- Multimodal Receipt Ingestion
- Automated Pass Creation (Google Wallet API)
- Spending Analysis & Savings Insights
- Offers & Payment Optimizer
- Predictive Inventory & Refill Alerts
- Food Expiry & Recipe Suggestions
- Push Notifications & Alerts
- Personalized Health & Lifestyle Suggestions
- QR Code Shopping Lists

# ARCHITECTURE DIAGRAMS

# Google Wallet Pass Creation Flow

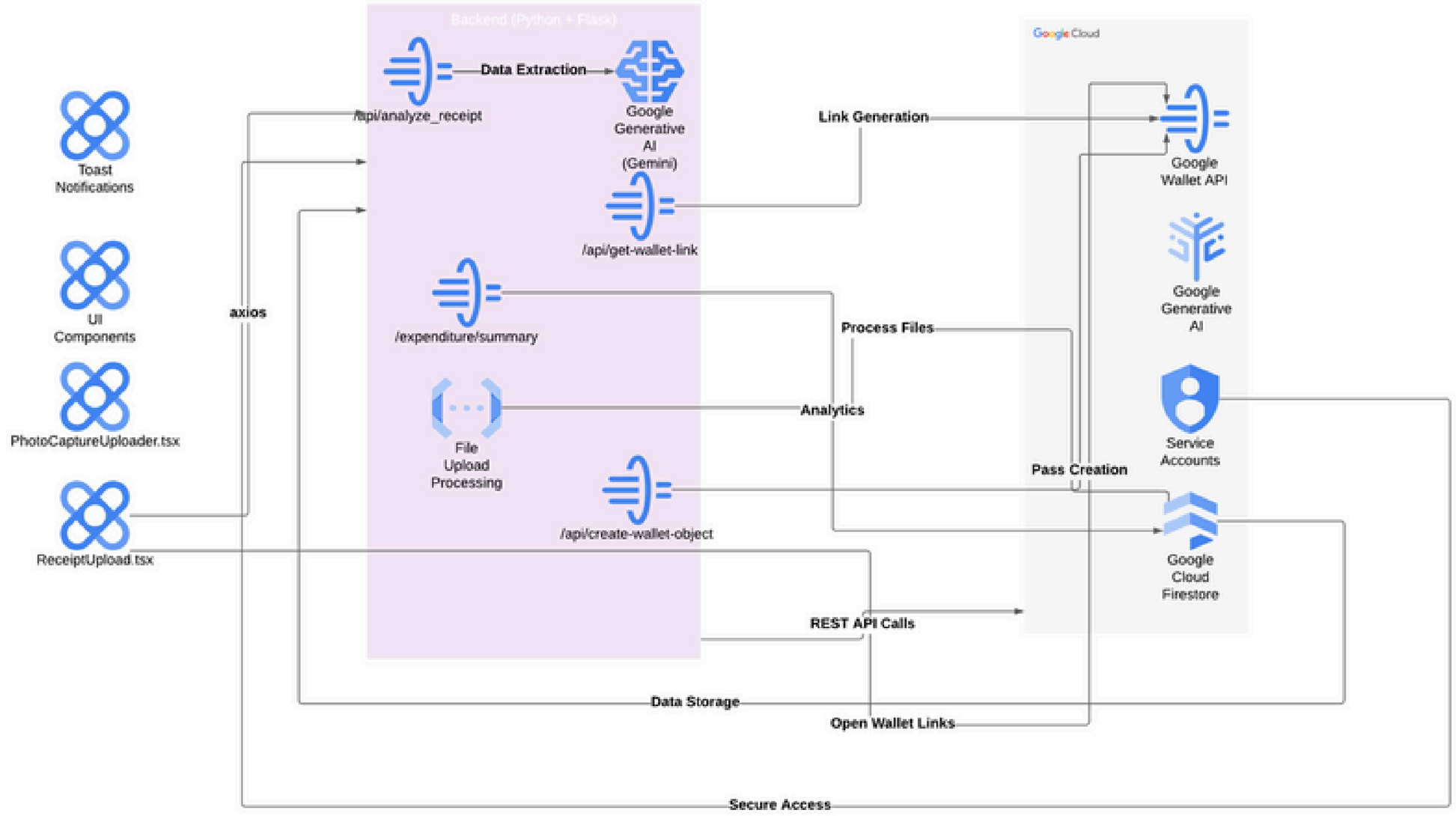

# Voice and Chat Assistant Flow

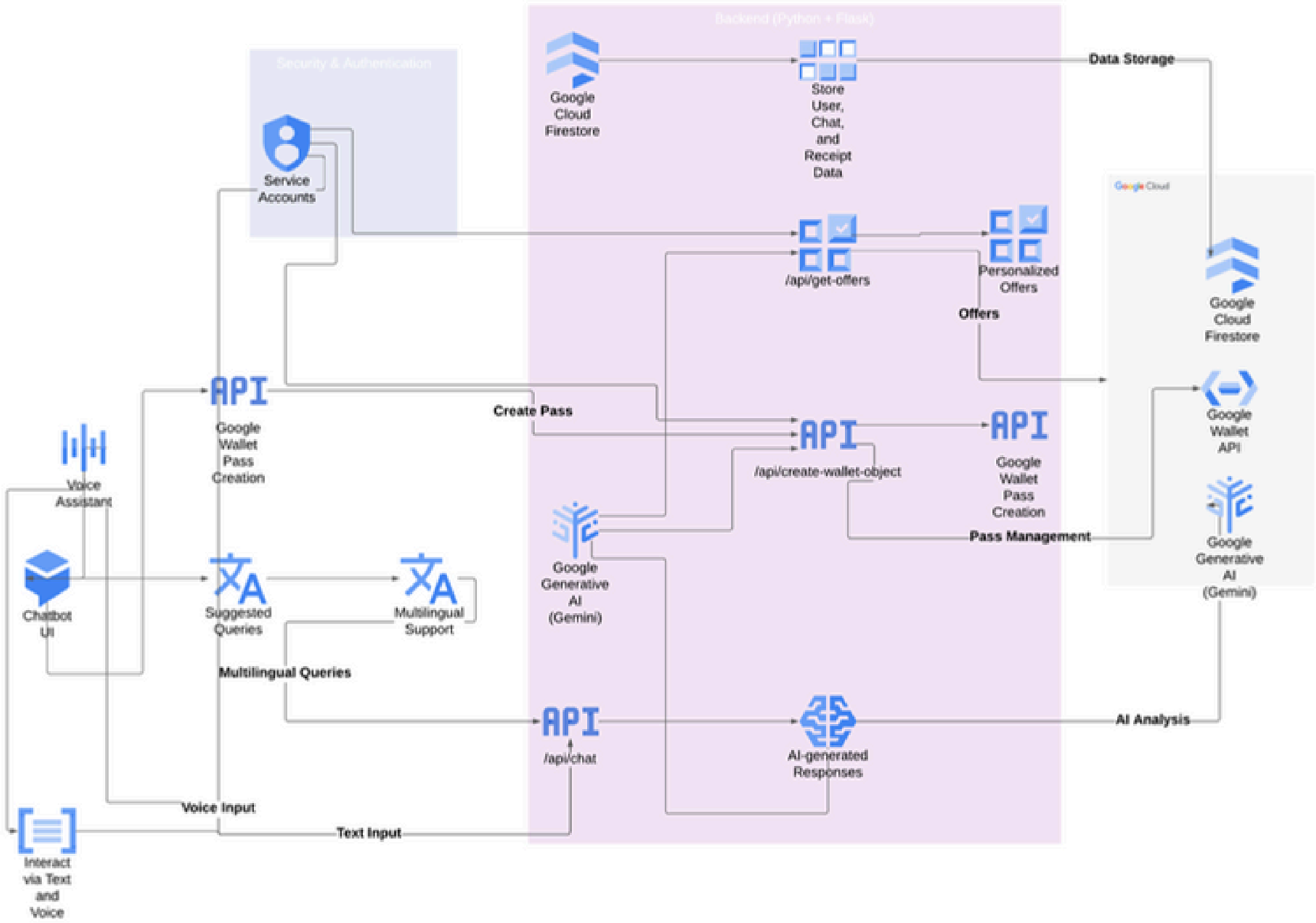

# Push Notifications and AI Insights Flow

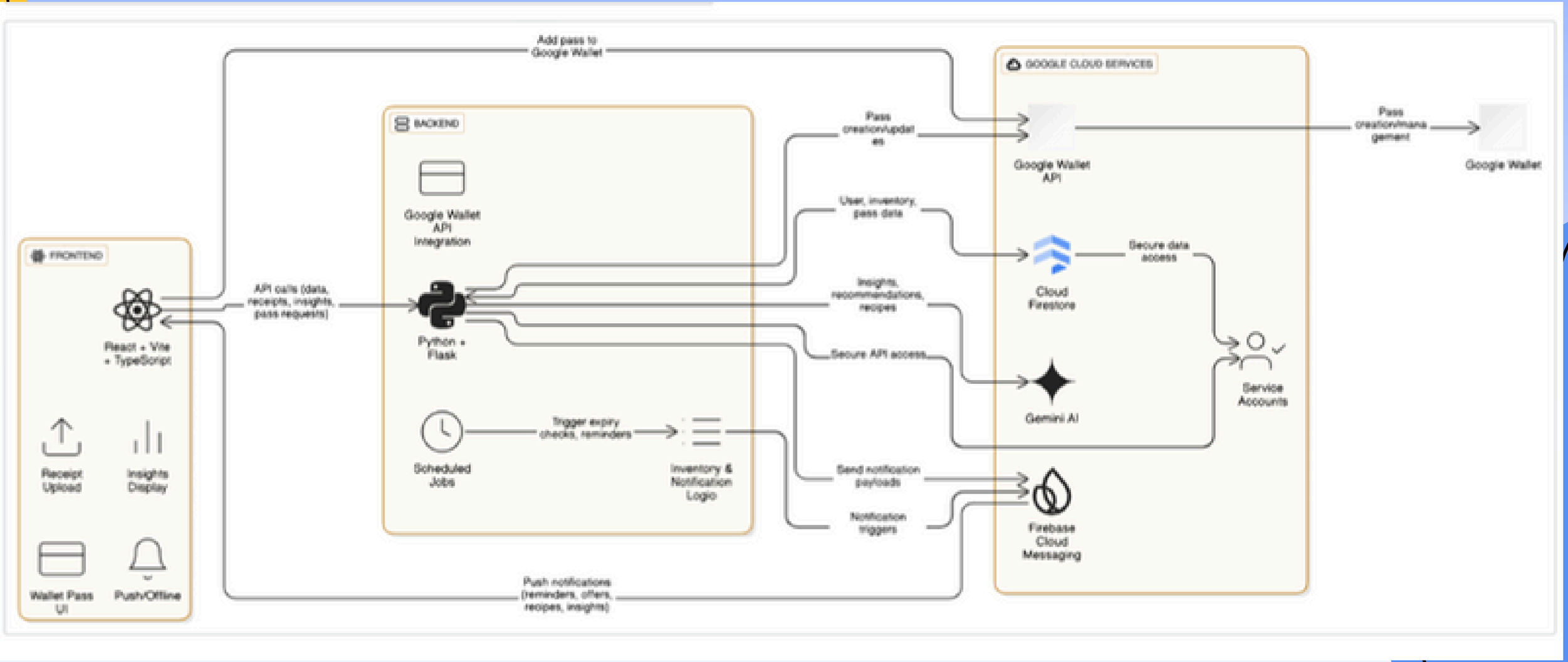

# TECHNOLOGIES

## FRONTEND

- Framework: React.js + PWA
- UI: React Bootstrap

## BACKEND

- Server: Python + Flask (REST endpoints, Firestore triggers)
- Auth: Firebase Authentication (email/password + OAuth)

## CLOUD (GCP)

- Database: Firestore (real-time NoSQL for users & receipts)
- AI / ML:
  - Gemini API (multimodal OCR/NLP + insight generation)
  - Vertex AI Agent Builder (LLM conversational orchestration)
- Localization: Cloud Translation API (supports multilingual queries & passes)
- Google Wallet API (pass creation, updates, push notifications)
- Gmail API (batch receipt scan from user inbox)

## EXTERNAL SERVICES & API

- Fi MCP server
- SMS Ingestion (Twilio SMS webhook or Android SMS listener)
- Third-Party Offers APIs (merchant discount & cashback feeds)

# Feature Scope

**Federated Learning for Privacy-Preserving Insights**
Leverage on-device AI with federated learning to offer personalized insights without ever sending sensitive financial data to external servers.

**Smart Assistant with Cross-Google Apps Context Awareness**
Allow Raseed to learn user patterns across Google apps and proactively suggest actions—like creating reminders in Google Tasks, easily add passes based on Gpay payments

**Gender-Aware Spending Insights**
With user consent, Raseed can analyze anonymized, gender-specific spending patterns—such as in wellness, personal care, or healthcare—and offer tailored insights

**Unified Loyalty & Rewards Hub**
Raseed can evolve into a centralized hub within Google Wallet to manage all loyalty programs, reward points, and cashback offers across various merchants. By automatically tracking reward balances and expiry dates, and surfacing the best available offers during purchases

Google Cloud

PRESENTS

# Agentic AI Day

Build the next generation of intelligent agents

Powered by H2S

# Thank you!